SPECIFICATION APPLIED

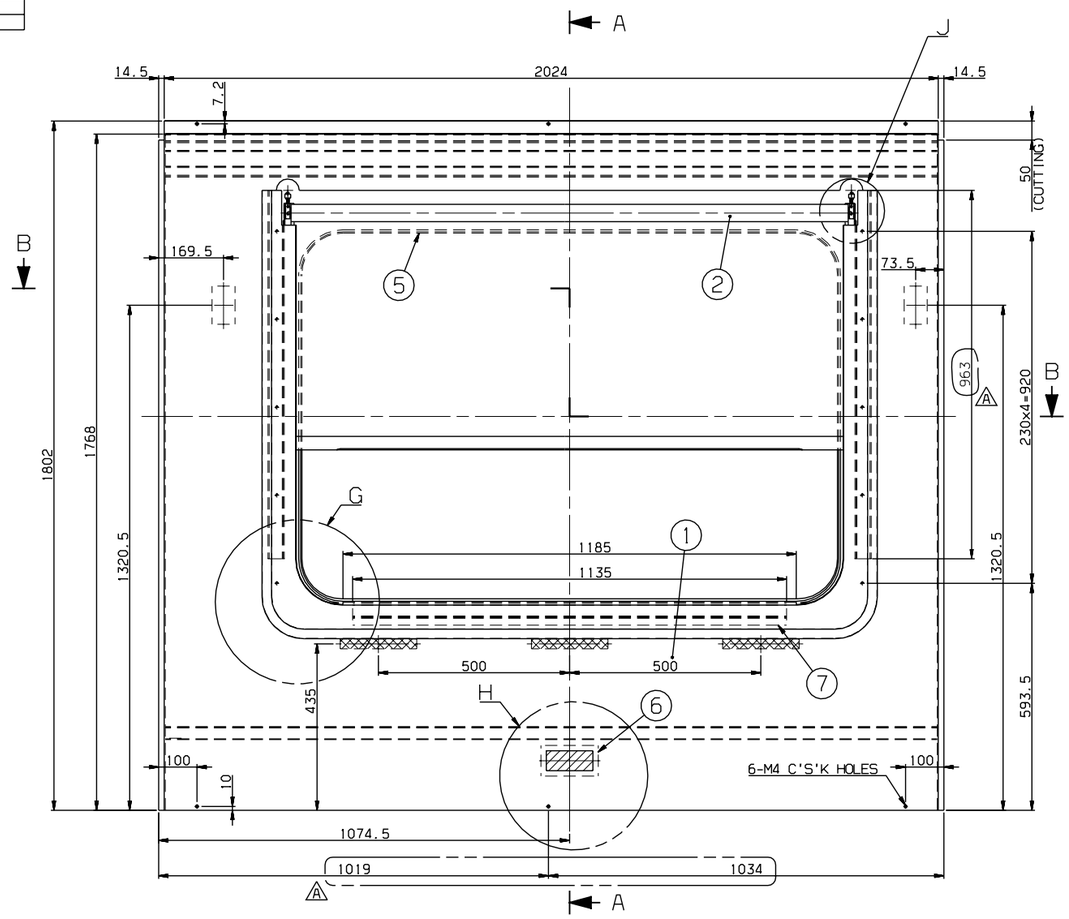

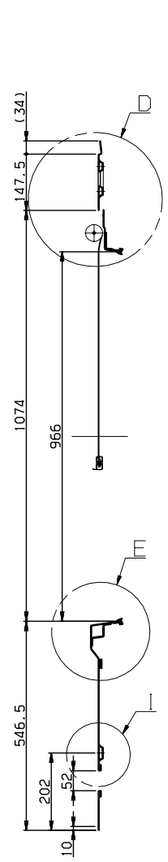

SECTION A-A

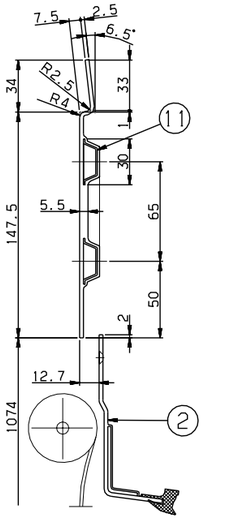

DETAIL D
SCALE=1/2

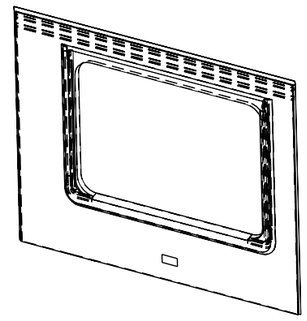

ISO VIEW

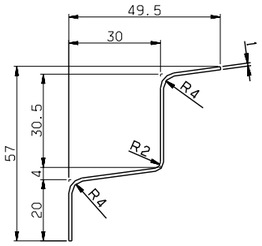

DETAIL #7
SCALE=1/1

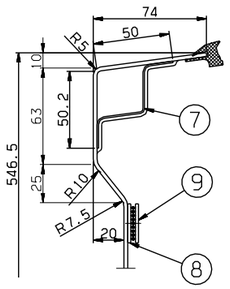

DETAIL E
SCALE=1/2

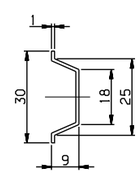

DETAIL #11
SCALE=1/1

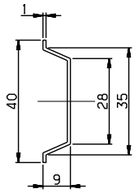

DETAIL #10
SCALE=1/1

NOTE

1. AN INTERIOR PANEL'S COLOR(RAL 7047) AND SURFACE SHALL BE MANUFACTURED AFTER SAMPLE'S APPROVAL BY CUSTOMER
2. PART 5 SHALL BE CUT ADEQUATELY AND USED
3. PART 7 IS TO PROTECT.(TO CUT ADEQUATELY)
4. PART 2 SHALL BE WELL OPERATED UNDER CONDITION OF ASSEMBLY
5. PART 8 SHALL BE FIXED ON THE PART 1, AND PART 9 SHALL BE DELIVERED SEPERATETLY
6. THE INTERFACE BETWEEN PART 1 AND PART 2 SHALL BE STRONGLY SEALED

△A 7. PART 4 SHOULD BE APPLIED WITH PART 13.

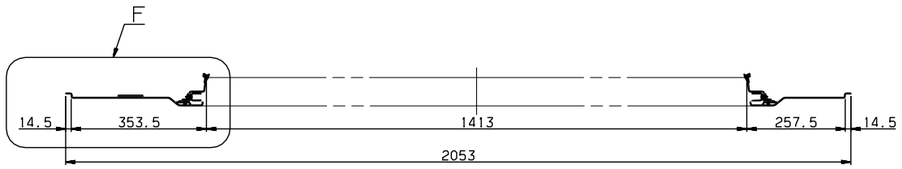

SECTION B-B

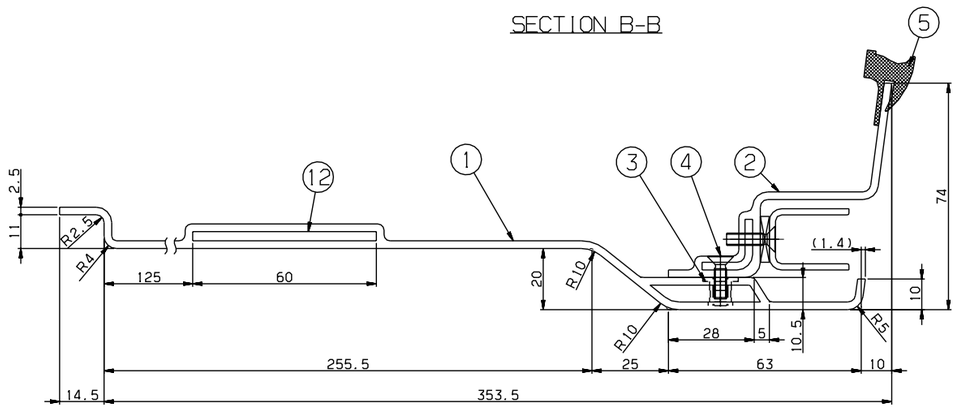

DETAIL F
SCALE=1/1

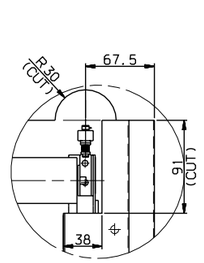

DETAIL J
SCALE=1/3

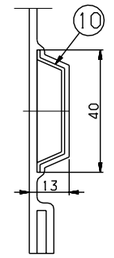

DETAIL I
SCALE=1/1

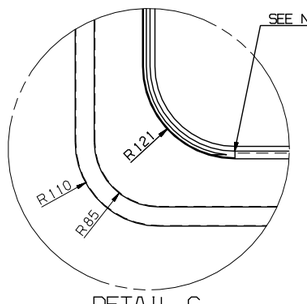

DETAIL G
SCALE=1/4

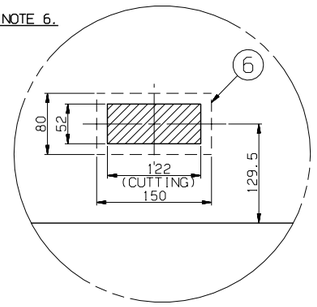

DETAIL H
SCALE=1/4

기호 MARK	일자 DATE	내용 DETAIL OF REVISION(E.C ZONE)	설변번호 E.C NO.	설계 DGN	검도 CHK	승인 APP
Ax4	2014.12.18	ADDED PART NO.#13 & DIMENSION	RSD1402-U071	H.U.LEE	K.B.PARK	J.Y.LEE

기호 MARK	일자 DATE	내용 DETAIL OF REVISION(E.C ZONE)	설변번호 E.C NO.	설계 DGN	검도 CHK	승인 APP

일반공차 GENERAL TOLERANCE			
절삭 가공부 MACHINING (±)			
용접 구조물 WELDING (±)			
주조 CASTING (±)			
판금 SHEET METAL (±)			

품번 NO.	부품 번호 PART NO.	품명 DESCRIPTION	재질 MATERIAL	수량 Q'TY	검증 V.T	비고 REMARKS
13	CP910004-406	ADHESIVE	ASSY	1		LOCTITE 242
12	RFP51104EJ0-012	SEAT,TAP	SUS304	2		PL T3x100x60
11	RFP51104EJ0-011	STIFFENER	A1050P	2		T1
10	RFP51104EJ0-010	STIFFENER	A1050P	1		T1
9	RFP51104EJ0-009	DUAL_LOCK,FASTENER	ASSY	3		3M,SJ-3550 L=200(DUAL TAPE)
8	RFP51104EJ0-008	DUAL_LOCK,FASTENER	ASSY	3		3M,SJ-3551 L=200(DUAL TAPE)
7	RFP51104EJ0-007	STIFFENER	SUS304	1		T1,L=1135
6	RFP51104EJ0-006	SEAT,TAP	SUS304	1		PL T3x150x80
5	RFP51104EJ0-005	RUBBER,SECTION	ASSY	1		RFP51011ANO,L=4600
4	RS60607-098S	SCREW,F.H	SUS304	10		M4x14
3	RFP51104EJ0-003	NUTSERT	SUS304	10		M4
2	RFP51009ANO	PANEL,BLIND WINDOW	ASSY	1		
1	RFP51104EJ0-001	PANEL	FRP	1		T2.5

승인 APP	JeongYul Lee 2014.10.10	재질 MAT'L	ASSY	명칭 TITLE	WINDOW,MASK,TYPE D
검도 CHK	KeongBong Park 2014.10.10	중량 G.W		도면 번호 DRG. NO	RFP51104EJ0 Ver. 00 Rev. -A
설계 DGN	HeonUk Lee 2014.10.10	일부 금지 MC / MD / CT	B / B / B	MS	RSD1402 RFP-
제도 DRG	HeeSook Jeong 2014.10.10	SIZE	A1	SCALE 1/8	시트 SHEET 1 of 1

참고번호 REF. NO.

HYUNDAI Rotem 현대로템주식회사

본 도면은 당사 재산권으로 보호받는 무한책임/배포 금지품. PROPERTY OF ISSUING ENTITY. CANNOT BE DISTRIBUTED OR REPRODUCED WITHOUT AUTHORIZATION.

CATIA